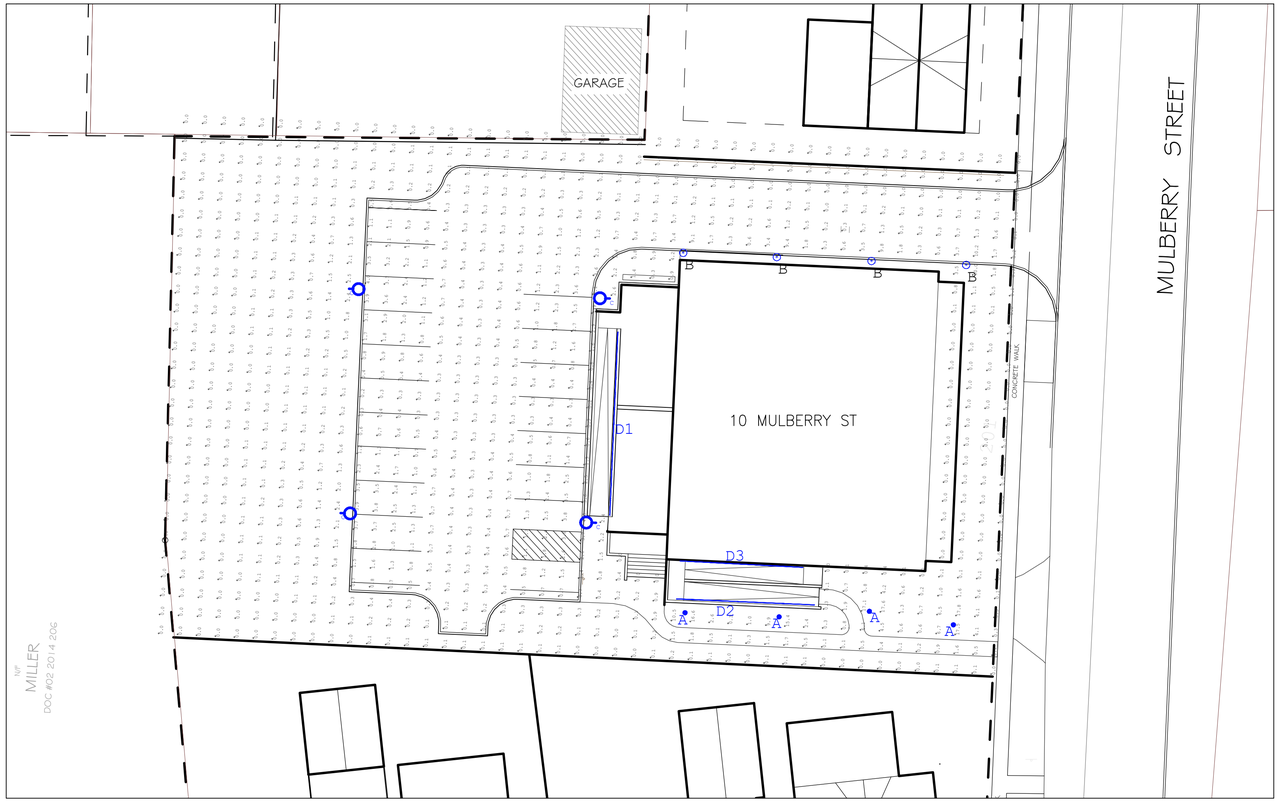

Luminaire Schedule								
Symbol	Qty	Label	Mounting Height	Arrangement	Description	LLF	Luminaire Lumens	Fixture Note
	4	A	3.5	Single	MRB-LED-16L-ACR-S-UNV-DIM-ALBCS1	0.90	1641	N.A.
	4	B	3.5	Single	MRB-LED-15L-ACR-A-UNV-DIM-ALBCS1	0.90	1049	N.A.
	4	C	12	Single	OPS-SA-03L-4F-UNV-40K8-Finish-ALBCS1	0.90	3188	N.A.
	1	D1	2.5	GROUP	VEGA-02-04-T-40-AA	0.90	416	Lumens per meter
	1	D2	2.5	GROUP	VEGA-02-04-T-40-AA	0.90	416	Lumens per meter
	1	D3	2.5	GROUP	VEGA-02-04-T-40-AA	0.90	416	Lumens per meter

N

30 0 15 30

1 inch = 30 feet

*TOP OF POLE LIGHTS SHALL NOT EXCEED 12'

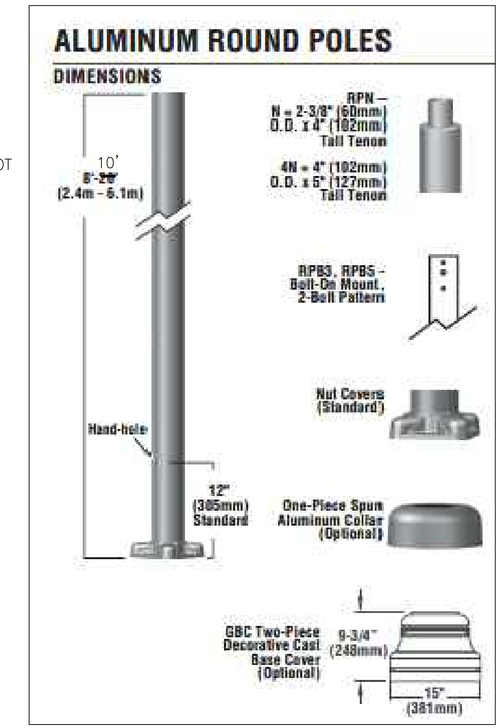

POLE DETAIL

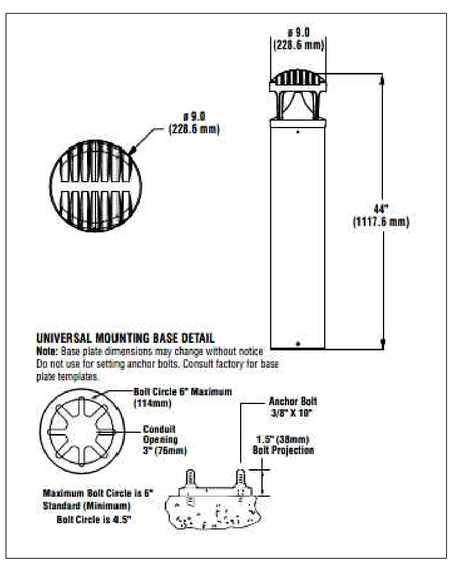

BOLLARD A & B DETAIL

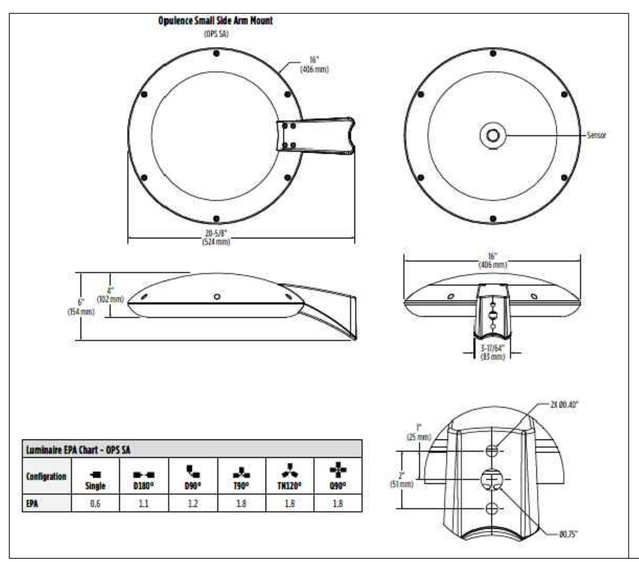

Luminaire EPA Chart - OPS SA						
Configration	Single	D180°	D90°	T90°	TK120°	Q90°
EPA	0.6	1.1	1.2	1.8	1.8	1.8

ARM DETAIL

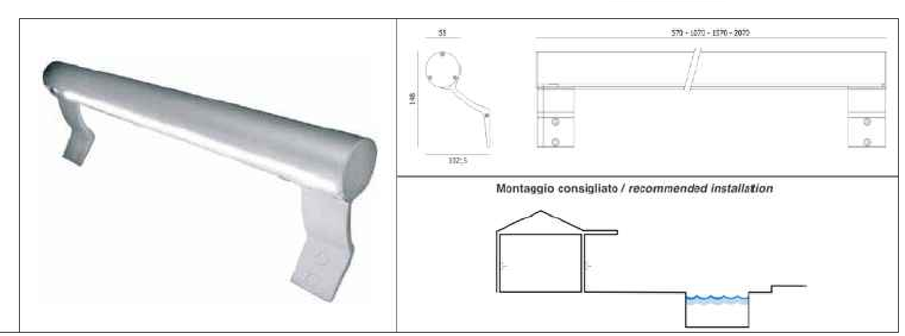

HANDRAIL DETAIL

NO.	REVISION	DATE	BY

UNAUTHORIZED ALTERATION OR ADDITION TO THIS DOCUMENT IS A VIOLATION OF APPLICABLE STATE AND / OR LOCAL LAWS

DRAFT

Creighton Manning
CREIGHTON MANNING ENGINEERING, LLP
145 MAIN ST, 3RD FLOOR, OSSINING, NEW YORK, 10562
P: (914) 800-2501 F: (518) 446-0397 WWW.CMELLP.COM

10 MULBERRY STREET LIGHTING PLAN
10 MULBERRY ST, RHINEBECK, NY
VILLAGE OF RHINEBECK, DUTCHESS COUNTY

LIGHTING EXHIBIT

DATE: NOV 2023 | CME No.: 123-020 | SCALE: AS NOTED

L1

SHEET NUMBER 1 of

LAST SAVED BY: Aaron Roberts
PLOT DATE: November 14, 2023 4:12 PM
FILE NAME: N:\Projects\2023\123-020 Dutchess Shepherd LLC - Rhinebeck\Working\CADD\dwg\graphics\Mulberry Lighting Exhibit.dwg